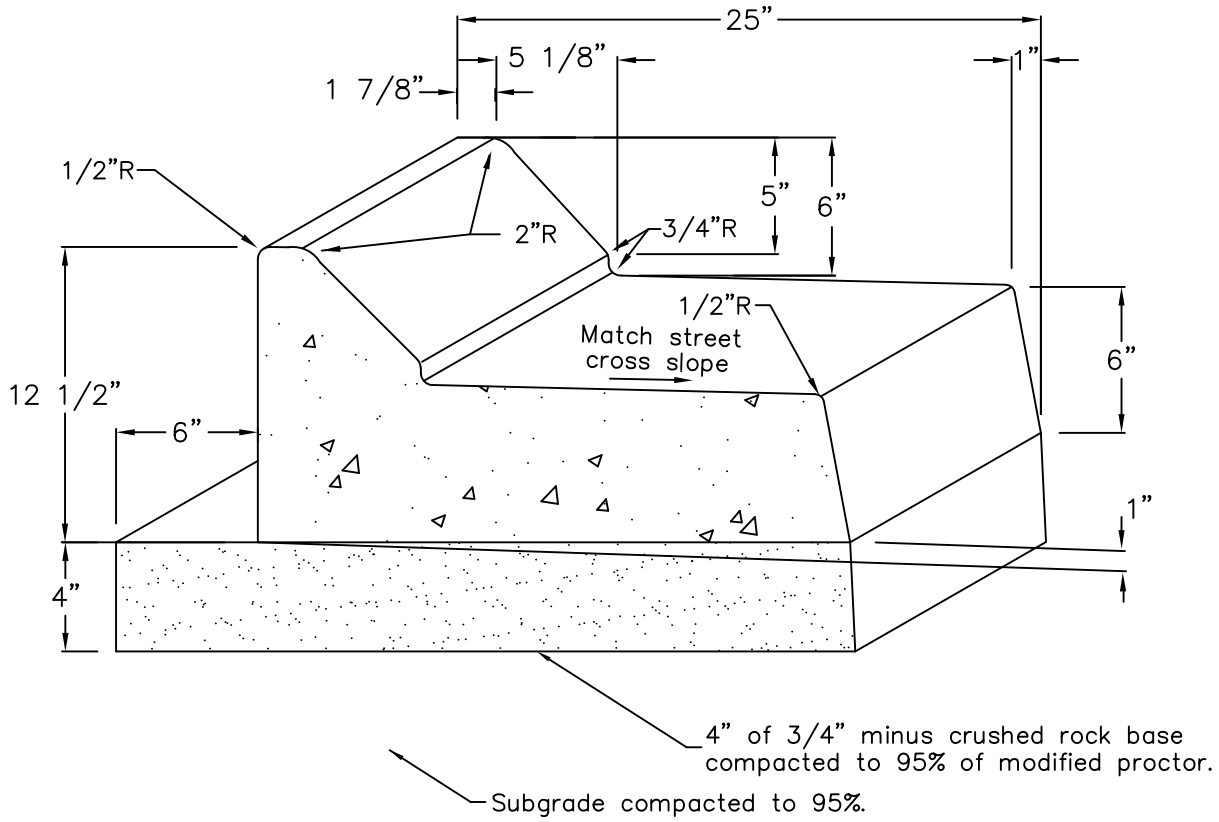

Not to Scale

NOTES:

1. Weakened plane joints shall be installed every ten (10) feet with expansion joint filler at curb returns and every one hundred (100) feet. per Standard Drawing C–5.
2. When existing curb is removed care shall be taken not to disturb existing asphalt pavement. Refer to Standard Drawing M–11 for asphalt street repair.
3. Joints between existing and new curb shall be sawed.
4. A light broom finish is required.
5. Compressive Strength of Concrete shall be 4000 PSI minimum.

REVISION	APPROVED	DATE	CITY OF COEUR d'ALENE STANDARD DRAWING	APPROVED BY:
			MEDIAN CURB AND GUTTER	Chris Bosley 6/13/18 CITY ENGINEER, PE 10804 DATE:
				DWG NO. C–4